Release Date：October 4, 2005
Revision Date：January 12, 2018

Technical Specifications for Amateur Radio Equipment

National Communications Commission

January 12, 2018

Table of Contents

Technical Specifications for Amateur Radio Equipment

1. These specifications are enacted pursuant to paragraph 1 of Article 50 of the Telecommunications Act.

2. These specifications are applicable to Class 1, Class 2, and Class 3 amateur radio equipment, with fixed type, mobile type and external radio frequency (hereafter RF) amplifiers or kit for type approval.

3. The terms adopted herein are defined as follows:

   3.1 Spurious emission: Emission on a frequency or frequencies which are outside the necessary bandwidth and the level of which may be reduced without affecting the corresponding transmission. Spurious emissions include harmonic emissions, parasitic emissions, intermodulation products and frequency conversion products, but exclude out-of-band emissions.

   3.2 Out-of-band emission: Emission on a frequency or frequencies immediately outside the necessary bandwidth that results from the modulation process, but excludes spurious emissions.

   3.3 Unwanted emission: Spurious emission and out-of-band emission.

   3.4 Frequency tolerance: The maximum permissible departure from the center frequency of the frequency band occupied by an emission from the assigned frequency or from the characteristic frequency of an emission from the reference frequency.

   3.5 Peak envelope power (PEP): The average power supplied to the antenna transmission line by a transmitter during one radio frequency cycle at the crest of the modulation envelope taken under normal operating conditions.

   3.6 Output power: Peak envelope power measured at the output terminals of the transmitter.

   3.7 Equivalent isotropically radiated power (EIRP): The output power when a signal is concentrated into a smaller area by the Antenna. The EIRP can take into account the losses in transmission line, connectors and includes the gain of the antenna.

4. Required test items and criteria

4.1 Operating frequencies and output power (as attached 1)

4.1.1 Class 1 amateur radio equipment:

（1）135.7kHz~137.8kHz;Output power of the transmitter shall be under 1 watt (EIRP).

（2）1.8MHz~1.9MHz;Output power of the transmitter shall be under 400 watts.

（3）3.50MHz~3.5125MHz;Output power of the transmitter shall be under 200 watts.

（4）3.55MHz~3.5625MHz;Output power of the transmitter shall be under 200 watts.

（5）7.0MHz~7.200MHz;Output power of the transmitter shall be under 200 watts.

（6）10.13MHz~10.15MHz; Output power of the transmitter shall be under 200 watts.

（7）14.00MHz~14.35MHz;Output power of the transmitter shall be under 400 watts.

（8）18.068MHz~18.168MHz;Output power of the transmitter shall be under 400 watts.

（9）21.0MHz~21.45MHz;Output power of the transmitter shall be under 200 watts.

（10）24.89MHz~24.99MHz;Output power of the transmitter shall be under 400 watts.

（11）28.0MHz~29.7MHz;Output power of the transmitter shall be under 400 watts.

（12）50.00MHz~50.15MHz;Output power of the transmitter shall be under 400 watts.

（13）144.0MHz~146.0MHz;Output power of the transmitter shall be under 100 watts.

（14）430.0MHz~440.0MHz;Output power of the transmitter shall be under 100 watts.

（15）1260MHz~1265MHz;Output power of the transmitter shall be under 10 watts.

（16）2.44GHz~2.45GHz;Output power of the transmitter shall be under 2 watts.

（17） 47.0GHz~47.2GHz;Output power of the transmitter shall be under 0.2 watts.

（18）248.0GHz~250.0GHz;Output power of the transmitter shall be under 0.2 watts.

4.1.2 Class 2 amateur radio equipment:

（1） 135.7kHz~137.8kHz;Output power of the transmitter shall be under 1 watt (EIRP).

（2） 1.8MHz~1.9MHz;Output power of the transmitter shall be under 200 watts.

（3） 3.50MHz~3.5125MHz;Output power of the transmitter shall be under 200 watts.

（4） 3.55MHz~3.5625MHz;Output power of the transmitter shall be under 200 watts.

（5） 7.0MHz~7.200MHz; Output power of the transmitter shall be under 200 watts.

（6） 10.13MHz~10.15MHz;Output power of the transmitter shall be under 200 watts.

（7） 14.00MHz~14.35MHz;Output power of the transmitter shall be under 200 watts.

（8） 18.068MHz~18.168MHz;Output power of the transmitter shall be under 200 watts.

（9） 21.0MHz~21.45MHz;Output power of the transmitter shall be under 200 watts.

（10） 24.89MHz~24.99MHz; Output power of the transmitter shall be under 200 watts.

（11） 28.0MHz~29.7MHz;Output power of the transmitter shall be under 200 watts.

（12）50.00MHz~50.15MHz;Output power of the transmitter shall be under 200 watts.

（13） 144.0MHz~146.0MHz; Output power of the transmitter shall be under 50 watts.

（14）430.0MHz~440.0MHz;Output power of the transmitter shall be under 50 watts.

（15） 1260MHz~1265MHz;Output power of the transmitter shall be under 10 watts.

（16） 2.44GHz~2.45GHz;Output power of the transmitter shall be under 2 watts.

（17） 47.0GHz~47.2GHz;Output power of the transmitter shall be under 0.2 watts.

（18）248.0GHz~250.0GHz;Output power of the transmitter shall be under 0.2 watts.

4.1.3 Class 3 amateur radio equipment:

（1） 50.0MHz~50.15MHz; Output power of the transmitter shall be under 25 watts.

（2）144.0MHz~146.0MHz; Output power of the transmitter shall be under 25 watts.

（3）430.0MHz~440.0MHz; Output power of the transmitter shall be under 25 watts.

4.1.4 External RF power amplifier or accessories shall comply with the following specifications.

（1） The gain value of external RF power amplifier shall be under 15 dB. When the designed peak envelope output power (hereafter called designed power) is below 1500 watts, the amplification shall be decreased.

（2） However, when decreasing the front end of external RF power amplifier, the output power shall not reach the designed value if average power of input emission power is below 50 watts.

（3） External RF power amplifier shall work continuously under designed power.

（4） During the external RF power amplifier inspection, 50 watts or above of average emission power shall be input to until the output power (designed power) has reached saturation point.

（5） The external RF power amplifier used in the amateur radio frequency distribution bands shall not be supplied with gain. The distribution frequency shall decrease the gain below 0 dB, depending on the filter, decreasing 12 dB (-12dB/oct) for every 8 degrees in frequency. The gain shall be under 6 dB between 24 MHz~26 MHz and 28 MHz~35 MHz.

4.1.5 When applying for the tests in 4.1.1 (1) and 4.1.2 (1), the applicant shall provide the antenna required for the test and, if deemed necessary, the test laboratory shall undertake a visit of the site for inspection.

4.2 Frequency tolerance: Under normal supply voltage, the temperature shall vary between -10 ° C and 50 ° C, and at 20 ° C the supply voltage varies within ± 15% of the rated value, shall meet the following requirements.

4.2.1 Operating frequency at HF: The frequency drift shall not be more than 100 Hz over any period of 15 minutes, after a 30-minute warm up period.

4.2.2 Operating frequency at VHF or UHF: ± 0.0005 % (5 ppm).

4.2.3 Others: According to Administrative Regulations on Radio Wave management frequency tolerance rules.

4.3 Modulation frequencies deviation

The maximum permissible frequency deviation for modulation frequencies shall comply with the following requirements:

4.3.1 Channel spacing at 12.5 kHz: Deviation of modulation frequencies shall not exceed ±2.5 kHz.

4.3.2 Channel spacing at 20.0 kHz: Deviation of modulation frequencies shall not exceed ±4.0 kHz.

4.3.3 Channel spacing at 25.0 kHz: Deviation of modulation frequencies shall not exceed ±5.0 kHz. 。

4.4 Spurious emission

（1）Operating frequency under 30 MHz:

The mean power of spurious emission shall be less than 40 dB above the average power of the main wave and shall not exceed 50 milli-watts (mW). However, if the average power of the main wave is less than 5W, the average power of spurious emission shall be lower than 30dB of the main wave power.

（2）Operating frequency between 30MHz and 235 MHz:

The mean power of spurious emission shall be less than 60 dB above the average power of the main wave and shall not exceed 1 milli-watts (mW). However, if the average power of the main wave is less than 25W, the average power of any spurious emission supplied to the antenna transmission line shall be lower than 40dB average power of the main wave and shall not exceed 25 micro-watts (μW).

（3）Operating frequency between 235MHz and 960 MHz:

The mean power of spurious emission shall be less than 60 dB above the average power of the main wave and not exceed 20 milli-watts (mW). However, if the average power of the main wave is less than 25W, the average power of any spurious emission supplied to the

antenna transmission line shall be lower than 40dB average power of the main wave and shall not exceed 25 micro-watts (μW).

（4）Operating frequency is 960MHz~17.7GHz：

The mean power of spurious emission shall be less than 50 dB above the average power of the main wave and not exceed 100 milli-watts (mW). However, if the average power of the main wave is less than 10W, the average power of any spurious emission supplied to the antenna transmission line shall be lower than 50dB average power of the main wave and shall not exceed 100 micro-watts (μW).

（5）Operating frequency above 17.7GHz shall adhere to the spurious emission rules of the Administrative Regulations on the Management of Radio Waves.

4.5 Receivers for transceivers of unwanted emission shall comply with the provisions of 2.8 of the Low-power Radio-frequency Devices Technical Regulations.

4.6 The diagrams of testing items for test and connection are shown as annex 1.

Attached 1

Operating frequency band and output power limit list

Frequency band (wavelength)		Frequency band(MHz)	Transmit power(W)			Remarks
			Class 1	Class 2	Class 3	
Low freq. (LF)	2200 m	0.1357-0.1378	200	200	N/A	Shall not exceed 1 W and used in secondary conditions
High freq. (HF)	160m	1.8-1.9	400	200	N/A	
	80m	3.5-3.5125	200	200	N/A	
	80m	3.55-3.5625	200	200	N/A	
	40m	7.0-**7.2**	200	200	N/A	
	30m	10.13-10.15	200	200	N/A	
	20m	14.0-14.35	400	200	N/A	
	17m	18.068-18.168	400	200	N/A	
	15m	21.0-21.45	200	200	N/A	
	12m	24.89-24.99	400	200	N/A	
	10m	**28.0**-29.7	400	200	N/A	
Very high freq. (VHF)	6m	50.0-**50.15**	400	200	25	
	2m	144-146	100	50	25	
Ultra high freq. (UHF)	70cm	430.0-**440.0**	100	50	25	Used in secondary conditions
	24cm	1260-1265	10	10	N/A	Used in secondary conditions
	12cm	2440-2450	2	2	N/A	Used in secondary conditions
Extremely high freq. (EHF)	6mm ~1m m	47000-47200	0.2	0.2	N/A	
		248000-250000	0.2	0.2	N/A	

Remarks: 1. Withdraw frequency bands are 75500-76000MHz and 142000-144000MHz.
2. Table power is peak envelope power (PEP)。

Annex 1

Diagrams for test connection

（1）Operating frequency

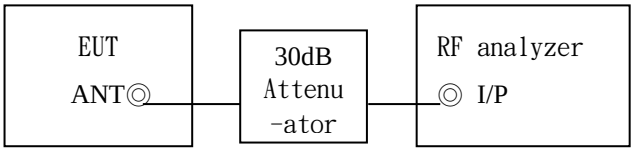

EUT: Equipment under test.
RF: Radio frequency.

（2）Output power

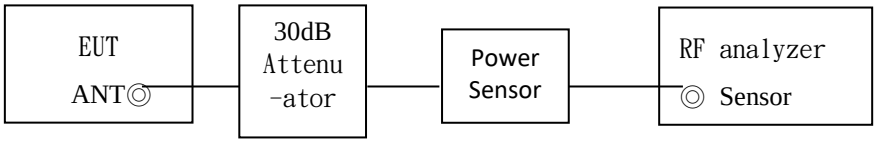

EUT: Equipment under test.

RF: Radio frequency.

（3）Frequency tolerance

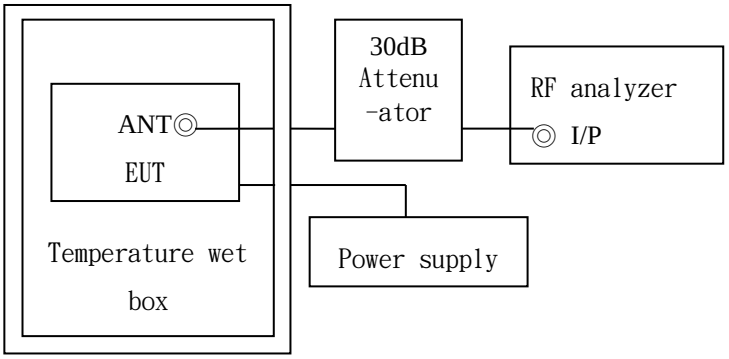

EUT: Equipment under test.

RF: Radio frequency.

（4）Spurious emission

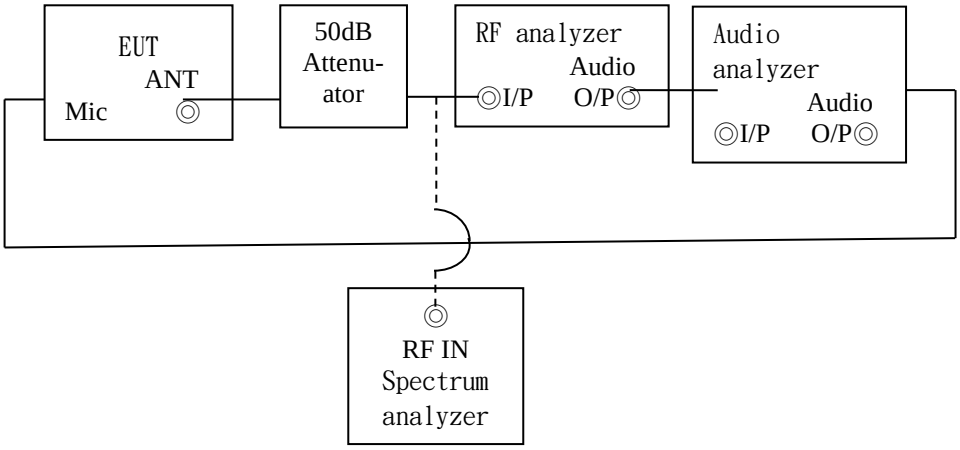

EUT: Equipment under test.

RF: Radio frequency.

(5) Electric field of spurious emission

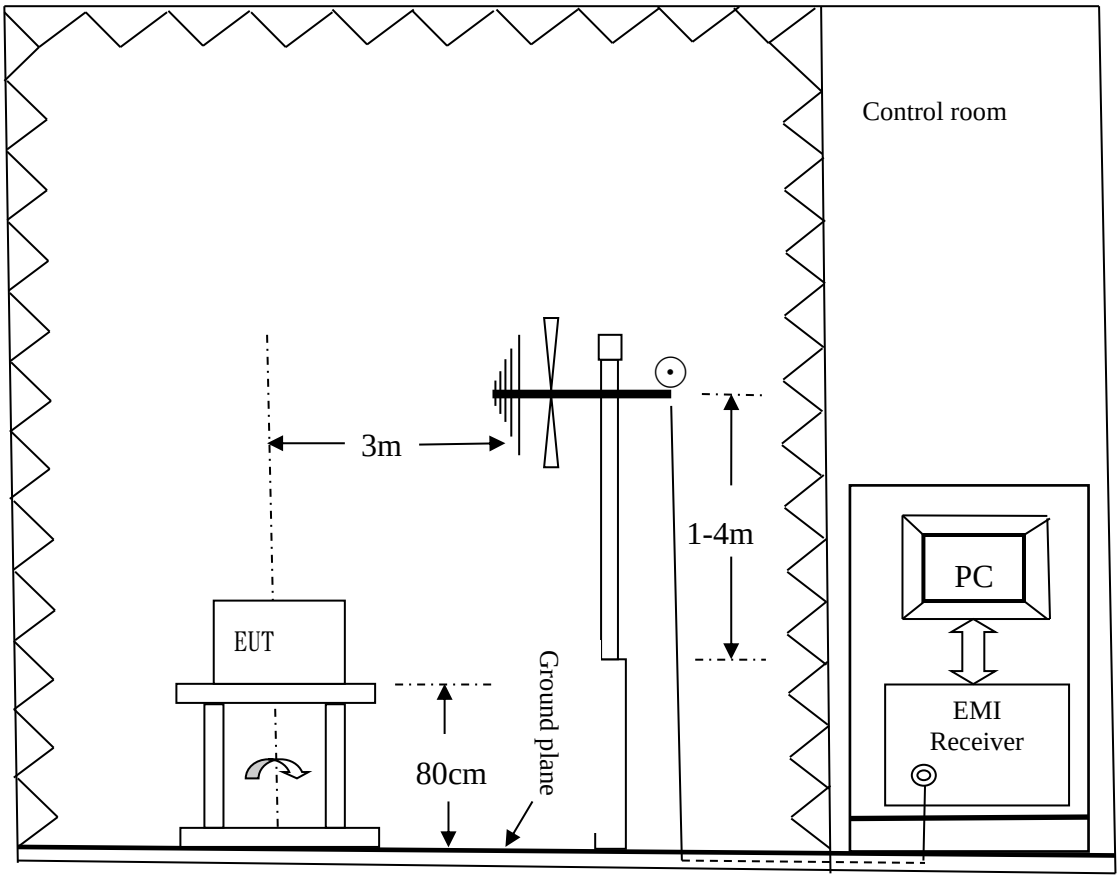

EUT: Equipment under test.

（6）Modulation frequencies deviation

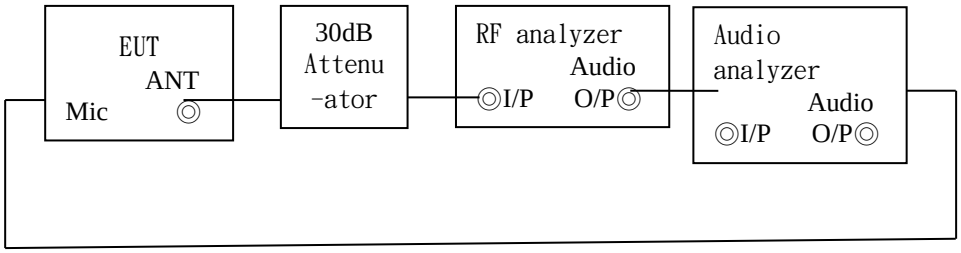

EUT: Equipment under test.
RF: Radio frequency.